THIRD ANGLE PROJECTION | ALL UNSPECIFIED DIMENSIONS IN MM | DO NOT SCALE - WORK TO FIGURED DIMENSIONS ONLY | IF IN DOUBT ASK

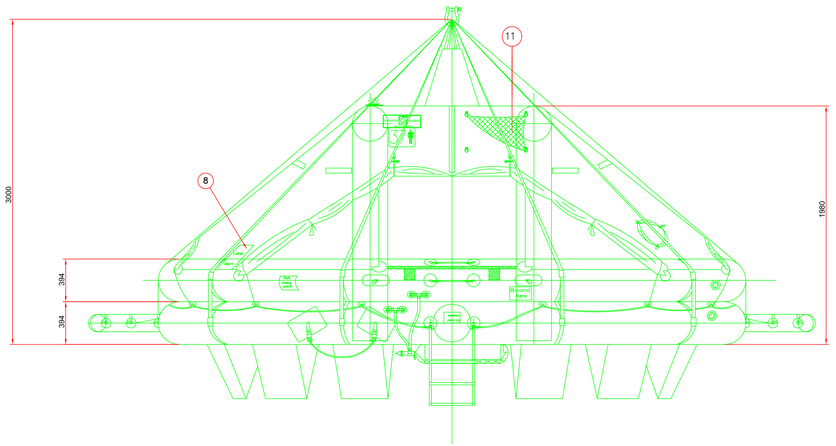

Détail A

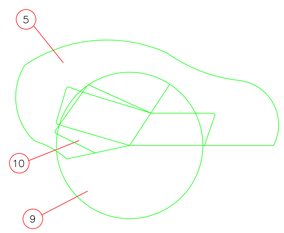

Détail B

Sangle renfort larg. 22 mm
Webbing 22 mm wide

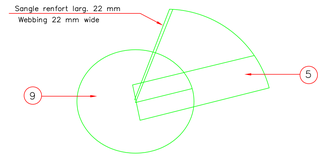

ARCHTUBE SIDEVIEW

FOR PATCH PLACEMENT INFORMATION PURPOSES

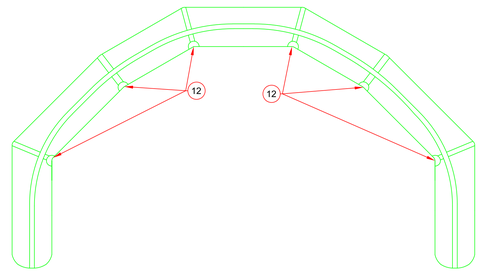

CARACTERISTIQUES GENERALES STANDARD FEATURES	
ø FLOTTEUR INFERIEUR–LOWER TUBE	394mm
ø FLOTTEUR SUPERIEUR–UPPER TUBE	394mm
ø ARCEAU–ARCH/TRAVERSE–THWART	334/378mm
ø RAMPE/RAMP	160mm
COTES INTERIEURES–INSIDE DIMENSIONS	4620–3830mm
COTES EXTERIEURES–OUTSIDE DIMENSIONS	5460–4620mm
HAUTEUR EMBARCATION–HEIGHT	2200mm
VOLUME FLOTTEUR INFERIEUR–LOWER TUBE	1815 dm^3
VOLUME FLOTTEUR SUPERIEUR–UPPER TUBE	1815 dm^3
VOLUME ARCEAU–ARCH/TRAVERSE–THWART	516x2/435 dm^3
VOLUME RAMPE/RAMP	2x37 dm^3
VOLUME UTILE–USABLE/ DEMANDE–REQUIRED	3630/3552 dm^3
VOLUME TOTAL	5171 dm^3
SURFACE INTERIEURE–INTERIOR AREA/ DEMANDEE–REQUIRED	139100/137640 cm^2
2 BOUTEILLE(S)–CYLINDER 15 L.[CO2.	8.85 kg]N2. 0.525 kg]
PRESSION SERVICE–WORKING PRESSURE	162hPa

TOLERANCES GENERALES APRES ALLONGEMENT STANDARD MARGINS AFTER STRETCHING	
Diametres : Diameter	± 5mm
Longueurs : Length	– 0.5% + 1%

FILE NUMBER CHX_BE 114

Nota: Filet réflecteur radar seulement sur DOT & AUS

Caution: Reflector radar net on DOT and AUS only

Adhesive canopy/collage tente

Adhesive tube „floor/collage flotteur,fond.

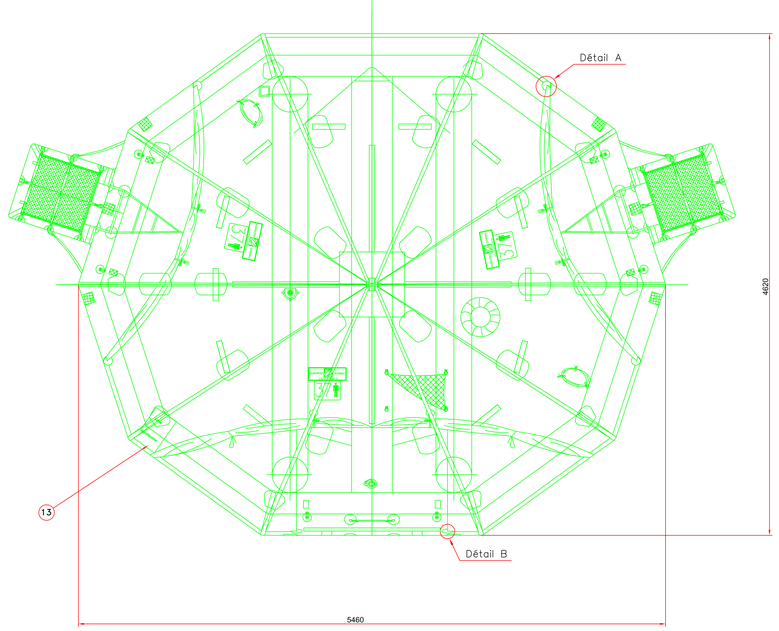

Détail liaison arceau–tente

Detail connection arch–canopy

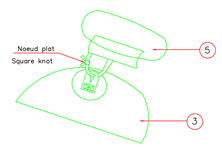

Montage de la tente sur flotteur supérieur

Canopy assembly on buoyancy.

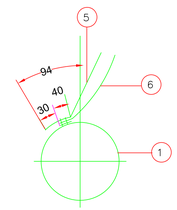

ITEM NO.	DRAWING # or PART RESULTING	DESCRIPTION	QTY	PART or MATERIAL REQUIRED	SPEC	NOTE
12	--	ZODIAC CIRCULAR ARCHTUBE REINFORCEMENT PATCH	12	53863003	:	-
11	--	RADAR REFLECTOR	1	--	:	-
10	--	ENTRANCE STRIP	8	--	:	-
9	--	PATCH SPLIT	6	--	:	-
8	--	LABEL IDENTIFICATION	1	--	:	-
7	--	ELECTRIC LIGHT	1	--	:	-
6	--	INNER CANOPY	1	--	:	-
5	--	OUTER CANOPY	1	--	:	-
4	--	THWART	1	--	:	-
3	--	FLOOR	1	--	:	-
2	--	ARCH	2	--	:	-
1	--	TUBE	2	--	:	-

INSERT ONLY IF DIFFERENT FROM PART NUMBER * REFER TO SUFFIX TABLE

SURVITEC GROUP LIMITED OWNS THE COPYRIGHT OF THIS DRAWING, WHICH IS SUPPLIED IN CONFIDENCE. IT MUST NOT BE USED FOR ANY PURPOSE OTHER THAN THAT FOR WHICH IT IS SUPPLIED AND MUST NOT BE REPRODUCED EXCEPT UNDER AN AGREEMENT OR WITH THE CONSENT IN WRITING OF THE COMPANY. ©

survitec
KINGSWAY
DUNMURRY
BELFAST
N. IRELAND
BT17 9AF

DRG TITLE: EC 37 DL: Main Assembly				
SHT TITLE: (REQUIRED ONLY ON MULTIPLE SHT DRGS)				
PART No(s). ZC40734	STATUS: In Review	DRG No. D 205139	SHT 1 OF 1	SIZE: A0
CREATED BY: kurtis.coffey	PROJECT No. DCS 2021-247 A1			
THIS REV. BY: canninge	EFF. FROM: 11/07/2023	REVE	SCALE 1:20	U.O.S.